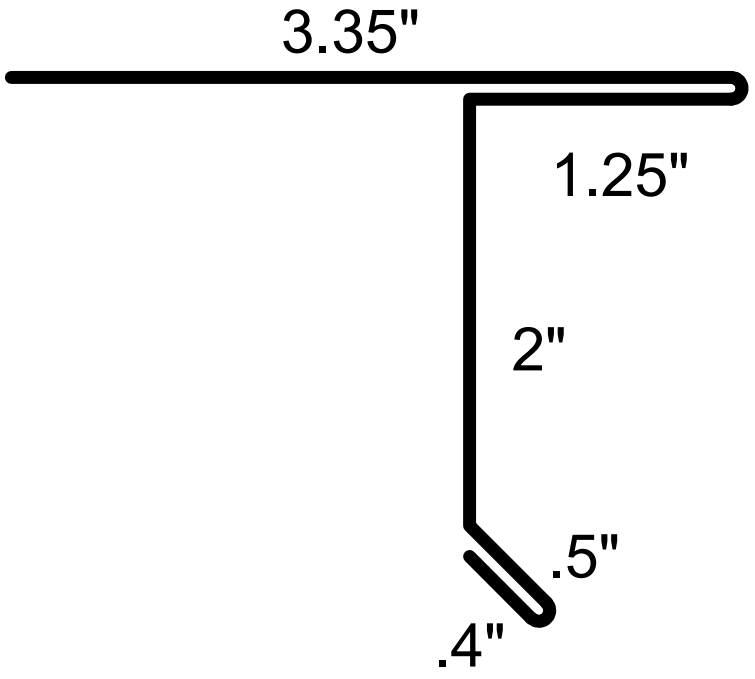

DESS
7.50"
D STYLE DRIPEDGE